SUNGLO GREENHOUSES

SERIES 1500 GREENHOUSE ASSEMBLY MANUAL

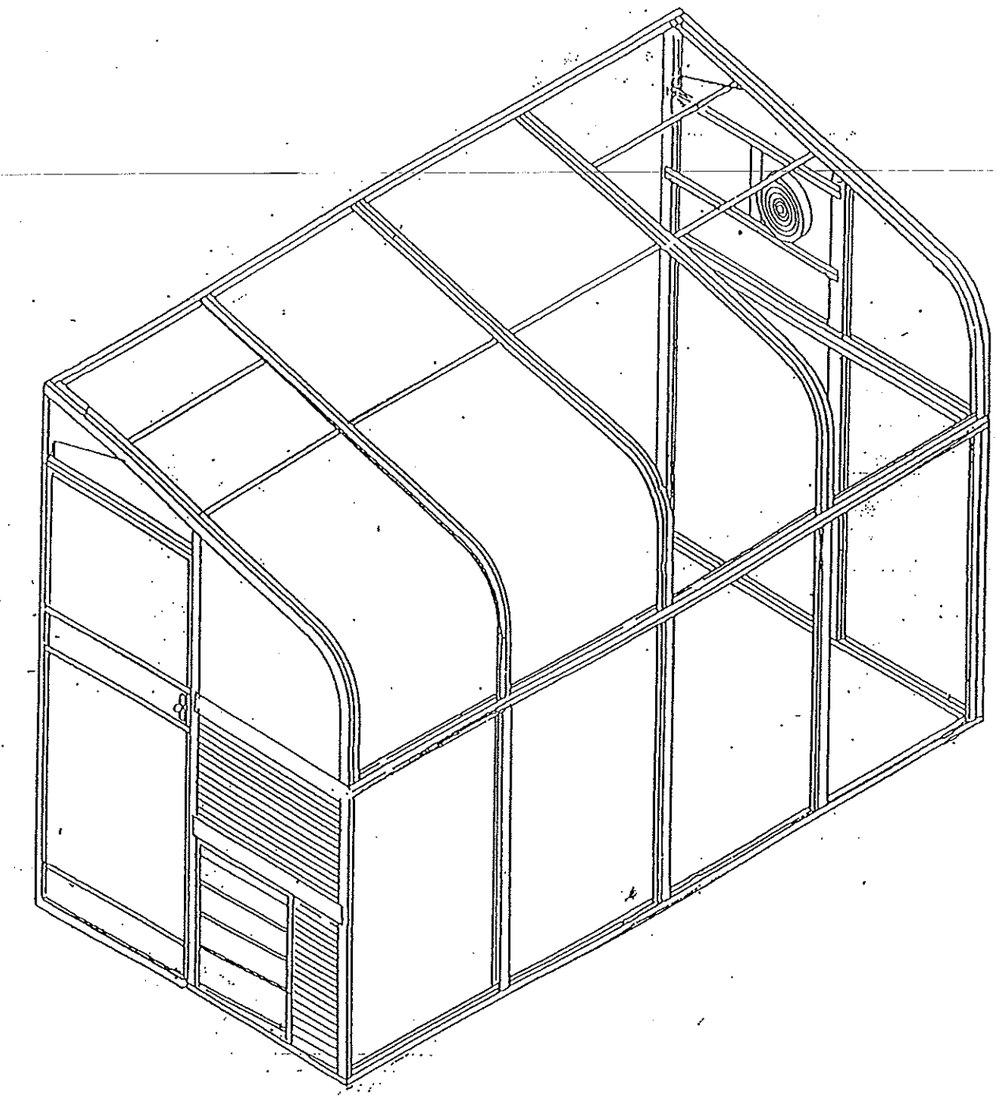

REVISED 4/97

SUNGLO GREENHOUSES
SERIES 1500 INTRODUCTION

Your Sunglo Greenhouse is sold complete with all the components necessary for assembly without cutting or refitting. Included in the kit is all aluminum structural elements, acrylic glazing, door, air vents, exhaust fan shutter, thermostat and bench frame work. Optional extras include grow trays, vinyl shelving, automatic light control and a deluxe power panel. Please contact us for a complete description of these options and prices.

NOTE: STUDY THE SUNGLO VIDEO BUILD TAPE AND READ THROUGH THE INSTRUCTION MANUAL AND SEQUENCE RUN LIST BEFORE BEGINNING THE CONSTRUCTION OF YOUR SUNGLO GREENHOUSE. THIS WILL PREPARE YOU FOR EACH ASSEMBLY STEP AND ALLOW YOU TO ESTIMATE THE TIME YOU WILL NEED. **REVIEW YOUR PACKING CHECK LIST BEFORE ASSEMBLING YOUR GREENHOUSE. NOTIFY US IMMEDIATELY IF THERE ARE ANY MISSING OR DAMAGED ITEMS.**

All components are marked with a part number that will not show after assembly. Do not remove the part numbers since they are helpful for ordering replacement parts.

Each kit provides a rivet gun, rivets and drill bits to assemble your greenhouse. You will need a hammer, tape measure, level, pencil, electric drill with a #2 phillips bit, caulking gun and a framing square. We provide 3 No. 30 aircraft rivet drill bits. Should you need more drill bits, and a standard No. 30 is unavailable, you may use a 1/8" diameter drill bit.

For a more weather proof greenhouse, we recommend a bead of silicon caulk (not provided), between the bottom rail "U" channels and the foundation plate, the ridge header and attachment plate and the vertical "U" channels to provide a weather proof seal.

Follow the assembly sequence steps carefully. Do not install rivets until they are specifically mentioned in the instruction manual and install them only in the locations shown. Rivets installed prematurely will cause assembly problems later. Do not install rivets from the outside where acrylic panels will rest when assembling the greenhouse. Use the minimum number of rivets recommended. As assembly progresses additional rivets for strength may be added later. If you install a rivet and have to remove it, the same drill bit used to drill the rivet hole will drill out the misplaced rivet. **Use the Long rivets where indicated in the manual**. These are provided for use in places where the shorter rivets are inadequate, such as when securing overhead trusses.

SUNGLO GREENHOUSES
FOUNDATION GUIDE
MODEL SERIES: 1500 LEAN -TO GREENHOUSES

THE FOOTINGS

IT IS CRITICALLY IMPORTANT TO START WITH A SQUARE & LEVEL FOUNDATION TO ATTACH YOUR GREENHOUSE. In most cases our greenhouses can be installed on 4 X 6 pressure treated lumber set on the 4" edge and buried in the ground with approximately 1/2" to 1" showing above grade. Some people have successfully used 2 X 4 or 4 X 4 pressure treated lumber. However, we do recommend the additional weight of a 4 X 6. If you are going to use a poured concrete or block footing you must attach a 2 X 4 pressure treated wood plate (sill plate) to the top of the footing. Our greenhouses are designed for fastening to a wooden surface.

In some cases you may wish to raise the greenhouse for additional height. To do this a "Pony or Knee wall" built of conventional framing, concrete blocks or built-up timbers will be adequate. You may want to keep your Sunglo door at the ground level, (this can be accomplished by notching the foundation 30 1/4" wide for the door opening). Please refer to diagram #2 - foundation guide for door drop, or call your Sunglo representative for more information on this procedure. **THIS ADDITIONAL HEIGHT MUST BE SPECIFIED WHEN YOU ORDER YOUR GREENHOUSE. MODIFICATIONS ARE DONE AT THE FACTORY.**

DRAINAGE

Drainage should be considered for removing excess water inside the greenhouse. Water spills are quite common in greenhouses, therefore inside drainage will be a benefit. We recommend gravel, a French drain or rock and perforated pipe, to help direct water away. If you are installing your greenhouse on a deck or lanai and drainage is a concern, you might consider placing a heavy layer of plastic down and provide routing for the water.

If your greenhouse foundation site has a high moisture content, high water table, sand, clay etc., it will be necessary to install a vapor barrier. The vapor barrier will keep excess moisture from wicking and accumulating in your greenhouse. The first step is to use a heavy plastic liner to line your site, then place on the liner 2" to 4" of drain gravel. The liner will prevent ground moisture from wicking-up into your greenhouse. If you find the air to be too dry, just poke a couple of holes in the liner for additional humidity.

If you are pouring a concrete slab you must allow proper time for the concrete to cure, or dry-out. Non-cured concrete can wick-up moisture from the ground and deposit it into your greenhouse causing excessive humidity. Keep in mind the fact that you will need a wood sill plate for attachment.

REVISED 4/95

FLOORS

You can use a variety of materials for your greenhouse floor. For good drainage, thermal retention and natural look you can use crushed rock or small stones and stepping stones. A row of concrete paving blocks along with gravel under the benches is inexpensive, easy to install and looks good. Stone or concrete pavers also provide a thermal mass helping to balance the greenhouse temperature to the outside. Keep in mind, the deeper the flooring material the better thermal retention and the better the insulation from ground contact.

FOUNDATION REQUIREMENTS

Your foundation plate needs to be level and square. A true and level foundation will reduce challenges when installing your greenhouse. The dimensions listed below are measured from the outside of the top plates. These dimensions will allow a 1" border around the completed greenhouse (see diagram #1). If your greenhouse is on top of a "pony" wall and requires a door drop, see diagram #2 for the requirements. Drainage, utilities, pavers and gravel should all be considered prior to the actual installation of the greenhouse. These items will be easier to install at this time.

PRIOR TO BUILDING ON THE FOUNDATION, RE-CHECK YOUR MEASUREMENTS TO BE SURE THEY ARE SQUARE, LEVEL AND THE VERTICAL ATTACHMENT PLATES ARE PLUMB. The unit will not join correctly if the foundation is not square and level. You may have to shim the foundation to assure a level surface.

MODEL	END	SIDE	VERTICAL
1500B	5' - 2 1/2"	7' - 8"	7' - 8"
1500C	5' - 2 1/2"	10' - 2"	7' - 8"
1500D	5' - 2 1/2"	12' - 8"	7' - 8"
1500E	5' - 2 1/2"	15' - 2"	7' - 8"
1500F	5' - 2 1/2"	17' - 8"	7' - 8"
1500G	5' - 2 1/2"	20' - 2	7' - 8"

REVISED 4/95

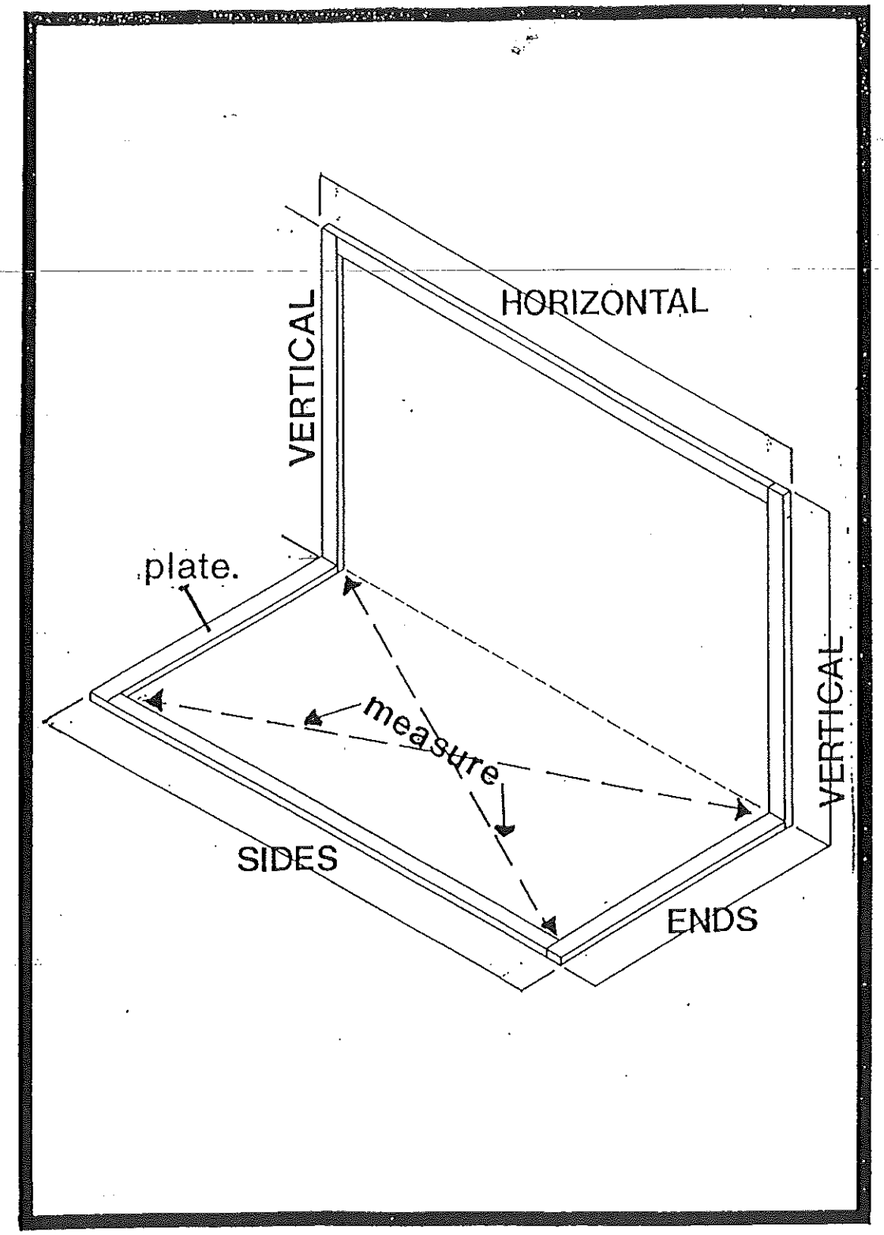

NOTE: Diagonals must be equal. Foundation must be level. Vertical must be 90° and square. Vertical height is measured from the top of the plate.

SUNGLO GREENHOUSES

SERIES 1500: MAINTENANCE OF ACRYLIC AND ALUMINUM COMPONENTS

The acrylic skin of the greenhouse is made of DR-Acrylic and has a life expectancy in excess of 15 years in direct sunlight. In order to maintain the acrylic skin at its highest efficiency, it should be kept clean to allow the maximum amount of sunlight to enter. We recommend cleaning at least twice yearly. Hose with a garden hose is a satisfactory method of cleaning, providing your water is not unusually hard and would leave a film on the surface. Do not towel when the unit is dry, as dust and dirt particles will scratch the surface and give a poor appearance to the exterior of the greenhouse. When you wash the greenhouse, pre-wash with a jet of water from a garden hose to remove the dust particles, then wash the surface with a very soft cloth or sponge and a mild dish detergent and hose off all traces of detergent residue. If you have difficulty reaching parts of the roof you may want to get a long handled soft RV brush from your local auto parts store. If mold or mildew is a problem in your area add two tablespoons of bleach per gallon to your wash water..

The aluminum framing needs no care in normal use. If your greenhouse is located near salt water and salty air is prevalent, a coating of auto paste wax once a year will keep the aluminum framing bright and resistant to pitting. If salt water does come in contact with the greenhouse rinse the greenhouse with clean water as soon as possible.

UTILITIES

Prior to installation of your foundation, you should consider the location of your power and water needs. It is much easier to bring in your electricity line as well as a water line up into the greenhouse area at this time.

All Sunglo greenhouses come standard with an automatic ventilation system. This includes the thermostatically controlled exhaust fan and the automatic fresh air shutter. We also carry many other accessories for your growing needs.

As with all electrical service we recommend you have a certified electrician handle all electrical connections.

ALUMINUM EXTRUSION SHAPE GUIDE

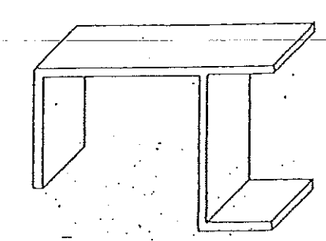

CORNER POST CHANNEL

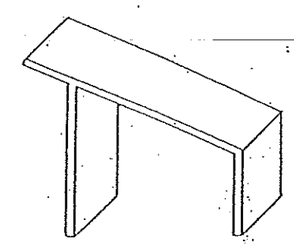

RIDGE CHANNEL

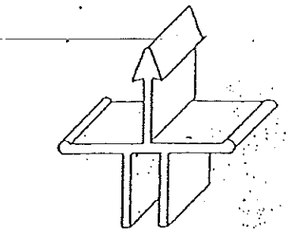

OVERHEAD TRUSS

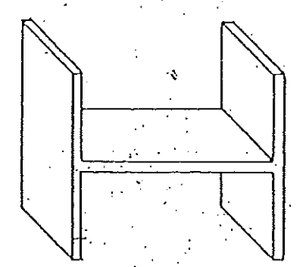

HEAVY "H" CHANNEL

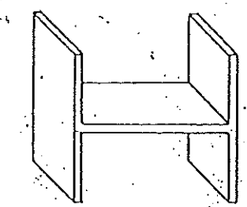

SMALL "H" CHANNEL

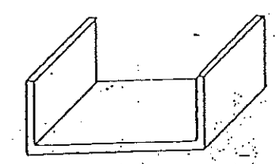

"U" CHANNEL

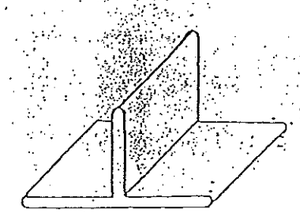

BENCH TEE, HANGER BAR

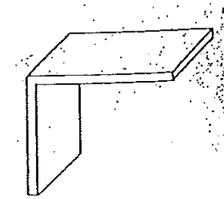

STRAIGHT TRIM

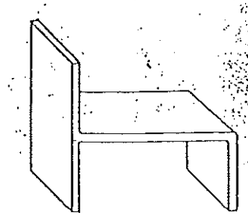

CURVED OVERHEAD CHANNEL

SUNGLO GREENHOUSES SERIES 1500

SECTION 1: FASTENING THE FRAME ASSEMBLY TO THE WOODEN FOUNDATION, VERTICAL WALL AND DOOR POST ASSEMBLY

SEQUENCE	PART #	PART NAME	QUANTITY	√
1.	1501-1	61 1/2" "U" LOWER RAIL L.H.	1	
2.	1501-2	61 1/2" "U" LOWER RAIL R.H.	1	
3.	SEE PACK LIST	"U" LOWER RAIL (FRONT)	1	
4.	1503-15	89" VERTICAL "U" RAIL (DOOR SIDE)	1	
5.	1503-13	89" VERTICAL "U" RAIL		
	#8	FOUNDATION SCREWS	SEE PACK LIST	
6.	1004-1	RIDGE CHANNEL	1	
7.	1001-1	48" CORNER POSTS	2	
8.	1002-1	48" WALL POSTS	SEE PACK LIST	
9.	1002-2	DOOR POST	1	
10.	1021	SMALL RIVETS	SEE PACK LIST	

Lay out the "U" lower rails onto your foundation and check the diagonals to see if they are square. Apply a bead of caulking compound (100% silicone is fine. not provided) to the flat surface on the "U" lower rails which will connect to the foundation. Using a #30 drill bit, drill holes approximately 3" from the corners and every 16". Secure the "U" lower rails to the foundation using the #8 screws provided as shown in **diagram 1 (sequence steps 1, 2 & 3).**

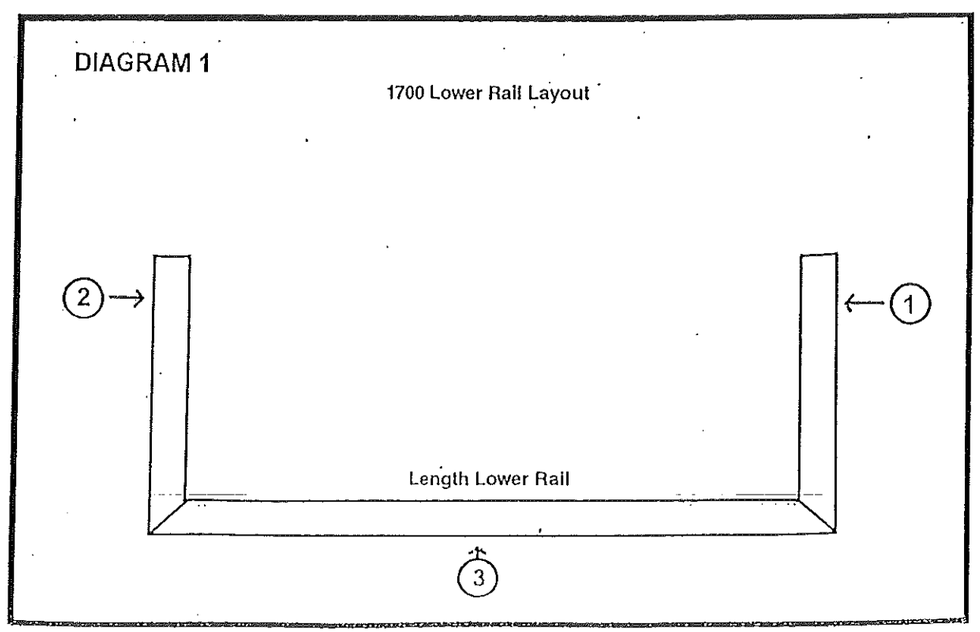

Apply a bead of caulking to the flat surface of the vertical "U" rails which will be fastened to the vertical wall plates. Place the rails against the foundation "U' rails and the wall surface to which they will be installed. Use a level to make sure that the vertical surface is level and square. Adjust or shim if necessary. **See diagram 2 (sequence step 4, 5 & 6).** Follow the instructions for the foundation "U" rails in attaching the vertical "U" rails.

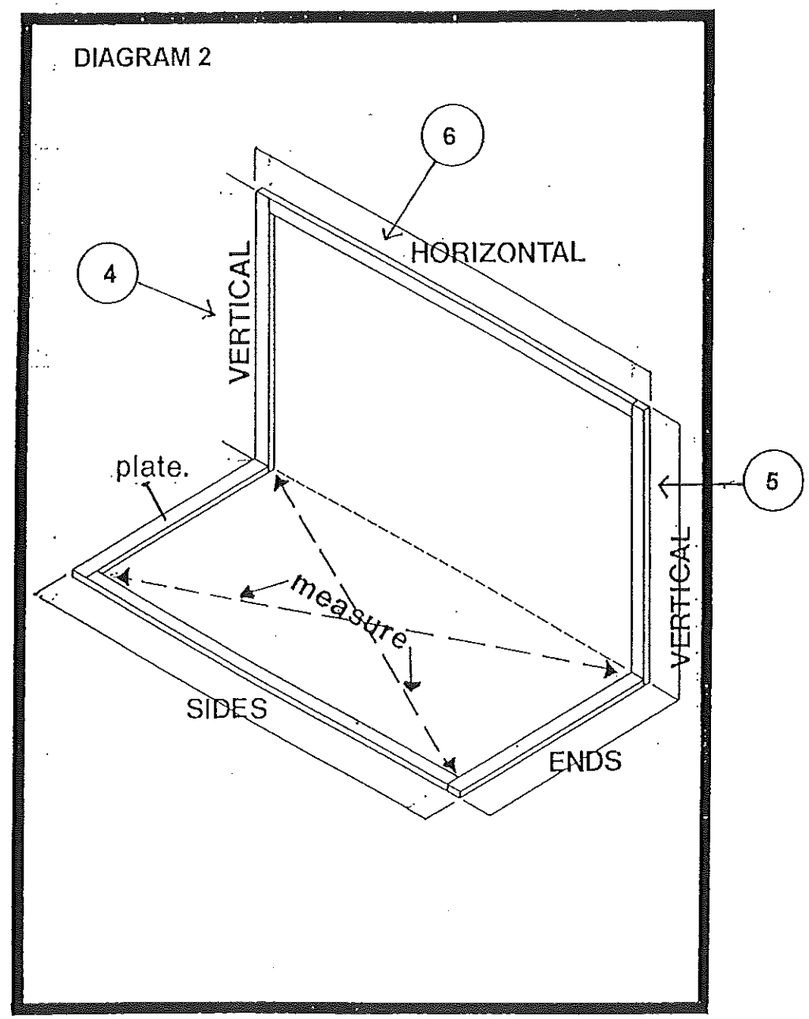

Apply a bead of caulking to the back side of the ridge channel and position it on the top of the two vertical "U" channels. Make sure the ends of the ridge channel are flush with the outside of the vertical "U" channels and the ridge channel is level fasten with the #8 screws provided. **(sequence step 6)**. At this point of the assembly you may wish to add a piece of angle flashing to the top of the ridge channel.

Install the corner posts in the lower frame and rivet in 3 locations as shown in **diagram 3 (sequence step 7)**.

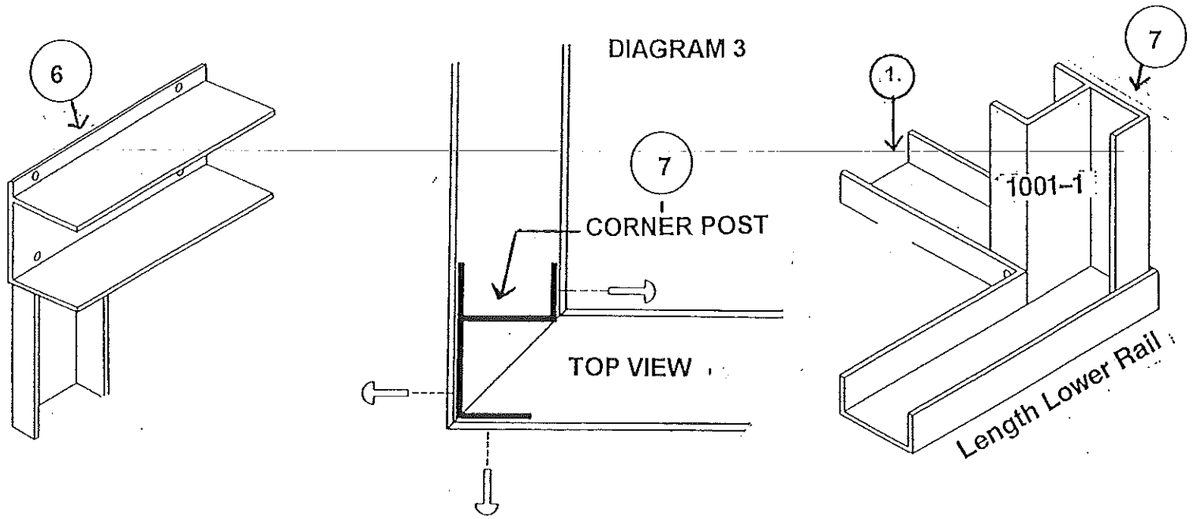

Wall posts are installed inside the lower frame, (lower "U" rails), on 30" centers from the corner posts. Rivet all wall posts from the inside of the greenhouse as shown in **diagrams 2C (sequence step 8)**. Use 2 rivets for each wall post.

Next install the door posts. Be sure the opening is 30" to allow the threshold to fit. The door post has an angled top. Be sure the angled top door post corresponds with the roof slope **(sequence step 9)**.

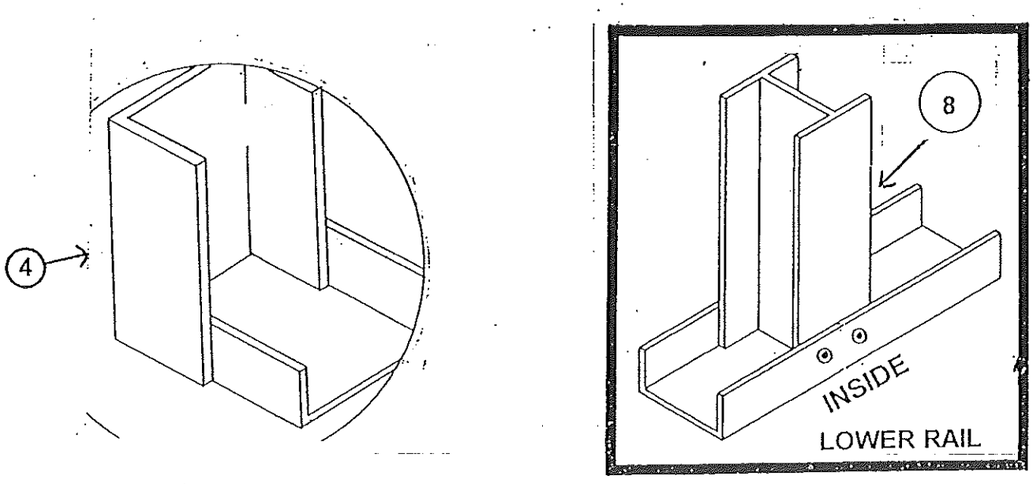

POST POSITION DIAGRAM

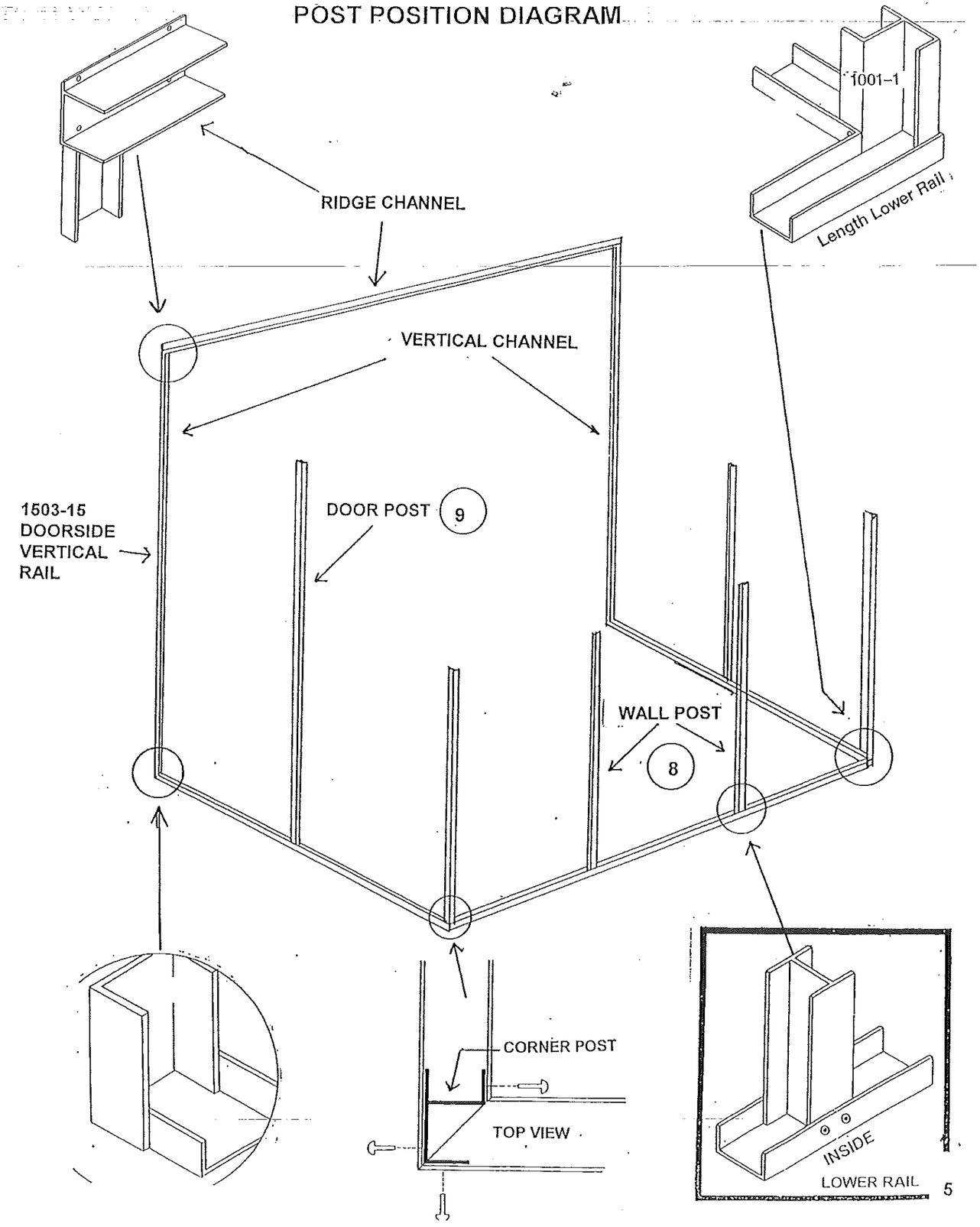

SEQUENCE	PART #	PART NAME	QUANTITY	√
11.	1029	48" OUTER WALL PANELS	SEE PACK LIST	
12.	1069	PANEL SUPPORTS	2 PER BAY	
13.	1030	48" INNER PANELS	SEE PACKING LIST	
15.	SEE PACK LIST	UPPER "H" RAIL (FRONT)	1	

It will be helpful to have an assistant available when installing the lower wall sections. Starting out from the corner post on one full length side wall install the flat outer wall panel **(sequence step 11)** between the corner post and the wall post. Secure the outer wall panel into the lower rail ("U" rail) using two panel supports **(sequence step 12)**. Panel supports are "U" shaped aluminum pieces as shown in diagram 4. When installing the panel supports, be sure the flat side is facing in toward the channels they are resting on. **REFER TO SECTION 11 ON PANEL SUPPORTS INSTALLATION.**

NOTE: AFTER STEPS #11 and #12 ARE COMPLETED AND BEFORE STEP #13 IS DONE, IT MAY BE HELPFUL TO PLACE TWO SMALL STRIPS OF MASKING TAPE FROM EACH SIDE OF THE OUTER WALL PANEL TO THE WALL POSTS ABOUT 6" BELOW THE TOP. THIS WILL HELP HOLD THE OUTER PANEL IN PLACE WHILE YOU INSERT THE INNER PANEL. REMOVE THE TAPE AFTER YOU CAP THE WALL WITH THE UPPER "H" RAIL.

Next install the corrugated inner panel **(sequence step 13)**, between the corner post and the wall post. Be sure the flat edge of the inner panel faces towards the inside of the greenhouse a shown in **diagram 5**. Repeat this procedure until the wall is completed.

Cap off the full length wall with the upper rail "H" channel **(sequence step 15)**. Rivet the upper rail "H" channel to both corner posts. This will secure the "H" channel temporarily. At a later time the upper rail "H" channel will be riveted to all the wall posts. After completing the lower front wall section, it is time to install the lower side wall section (side with no door).

The side with no door is installed in the same manner as the full length front wall. When the outer and inner panels and the panel supports are in place, cap them off with a upper rail "H" channel **(sequence step 15)**, and rivet the ends of the rail to both corner posts. **See diagram 6A.**

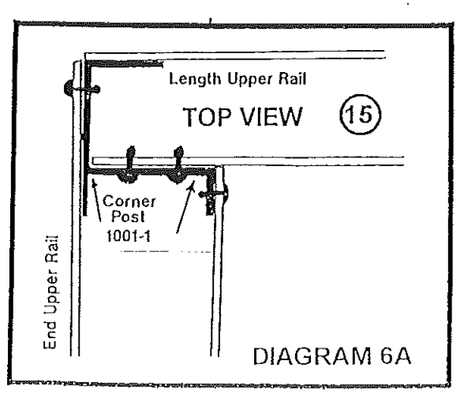

DIAGRAM 6A

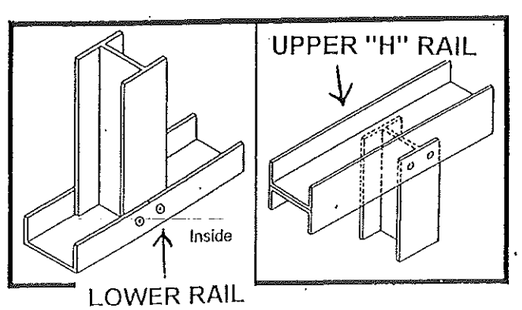

Section 2: Installing the lower wall section

During the lower wall assembly it will be helpful to spray the inner channel of the wall post upright (part # 1002-1) and the outer panel (part # 1029) with water to ease the entry of the inner corrugated wall panel into the upright wall posts. This will help reduce the friction involved in assembling these pieces.

Note the area to spray water in the diagram below

DIAGRAM 5

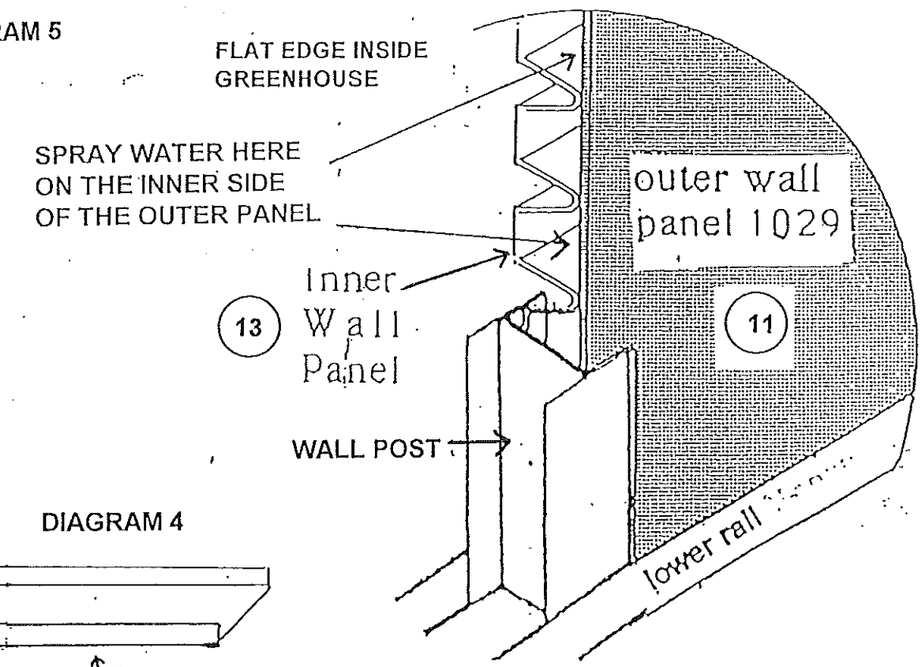

DIAGRAM 4

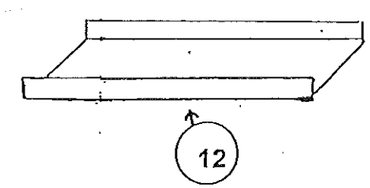

PS. YOU MAY SUBSTITUTE AMORALL OR WD-40 INSTEAD OF WATER. HOWEVER, PLEASE USE THESE PRODUCTS VERY, VERY SPARINGLY.

SEQUENCE	PART #	PART NAME	QUANTITY √
16.	4C556	12" SHUTTER w/ MOTOR	1
17.	1002- 6	15 3/16" SHUTTER POST	1
18.	1058	15 1/8" OUTER FILLER PANEL	1
19.	1069	PANEL SUPPORTS	2
20.	1059	15 1/8" INNER FILLER PANEL	1
21.	1003-11	30" SLOTTED "H" RAIL	1
22.	1277-12	32 5/8" X 30" OUTER SHUTTER PANEL	1
23.	1069	PANEL SUPPORT	2
24.	1276-12	32 5/8" X 30" INNER SHUTTER PANEL	1
25.	0031-5	31 1/2" UPPER "H" RAIL	1

The lower front wall (door end) is now ready to be installed. First install the fresh air shutter motor to the fresh air shutter per the manufacturers instructions. (12" Schaefer shutters - white plastic frame, have shutter motor pre-assembled). The fresh air shutter system is located to the right side of the door opening as shown in **diagram 6B**. Place the fresh air shutter inside the lower frame ("U" rail) and against the corner post. Making sure the fresh air shutter will open outward (not inward), rivet it to both the corner post and the lower frame, ("U" rail). Be sure the shutter post is tight against the fresh air shutter to allow adequate spacing for the outer and inner filler panels.

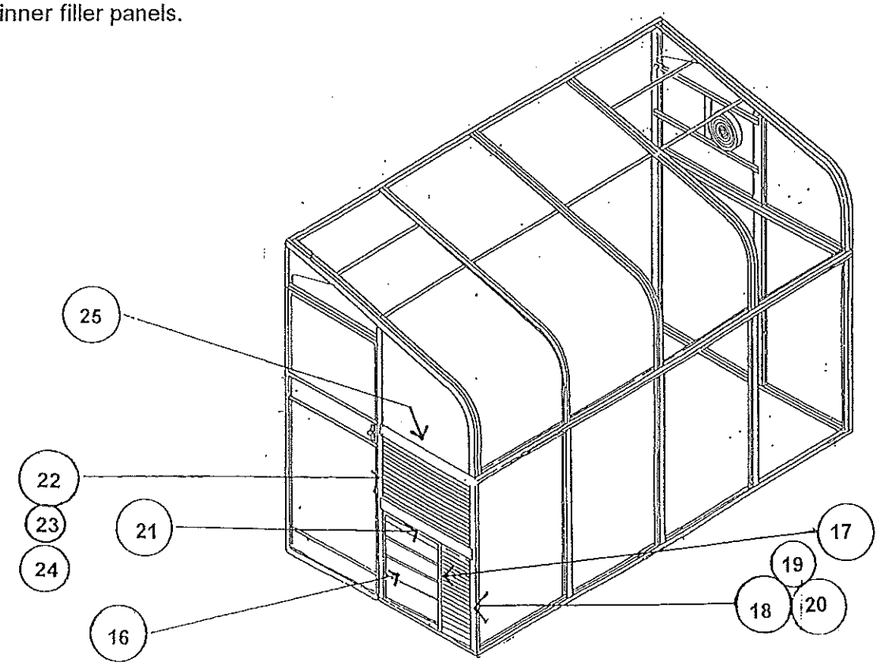

Install the outer and inner shutter panels in the same manner as the walls. When the outer & inner panels are installed, cap them off with a horizontal "H" channel & rivet to the door post & corner post as shown in **diagram 6, 6A (sequence steps 16 thru 26).**

The last step in the completion of the lower wall section is to rivet the upper rail "H" channels to the wall posts as shown in **diagram 7**. Be sure the upper rail "H" channels are completely down on the wall posts, and the wall posts are at 30" centers in the upper rail "H" channels. Prior to riveting check for level on the upper rail "H" you may need to make some minor adjustments to the wall posts for proper alignment..

Diagram 7

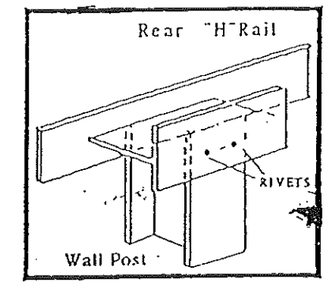

Diagram 6

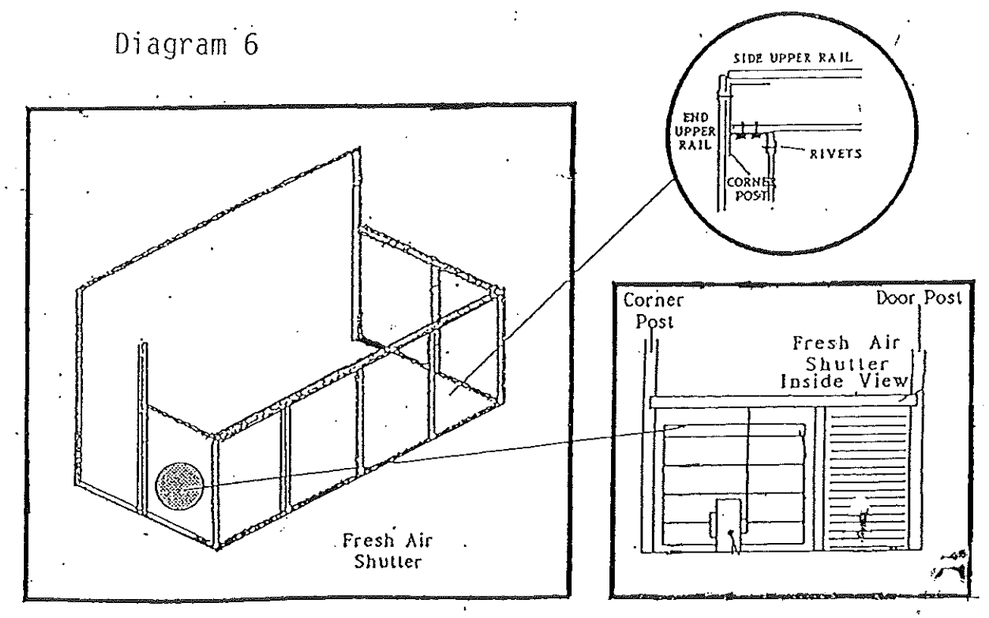

SUNGLO GREENHOUSES SERIES 1500
SECTION 3: UPPER SIDE WALL (GABLE END NO DOOR)

SEQUENCE	PART #	PART NAME	QUANTITY	√
27.	1002-4	28 7/8" UPPER WALL POST	1	
28.	1057	8 13/16" X 29 7/8" LOWER OUTER PANEL	1	
29.	1069	PANEL SUPPORTS	2	
30.	1056	8 13/16" X 29 7/8" LOWER INNER PANEL	1	
31.	1003-11	30" SLOTTED "H" RAIL	1	
32.	2C710	12" FAN	1	
33.	1002-6	15 1/8" FAN POST	1	
34.	1058	15 1/8" X 14 5/8" FAN OUTER PANEL	1	
35.	1069	PANEL SUPPORT	1	
36.	1059	15 1/8" X 14 5/8" FAN INNER PANEL	1	
37.	1003-11	30" "H" SLOTTED RAIL	1	
38.	1015	OUTER CORNER PANEL	1	
39.	1069	PANEL SUPPORTS	2	
40.	1043	LEFT HAND INNER CORNER PANEL	1	
41.	1549-2	LEFT HAND VENT FRAME	1	
42.	1503-1	CURVED OVERHEAD CHANNEL	1	

In completing the upper side wall of your Greenhouse, the side of the greenhouse that contains the fan should be assembled first (gable end with no door). Position the upper wall post and rivet it to the upper rail "H" channel as shown in **diagram 8 (sequence steps 27)**. Be sure the upper wall post is aligned directly over the bottom wall post, and its cut angle correspond to the roof slope. When the lower outer and inner panels are installed **(sequence steps 28, 29, 30)**, cap them off with a horizontal "H" channel **(sequence step 31)**.

Diagram 9

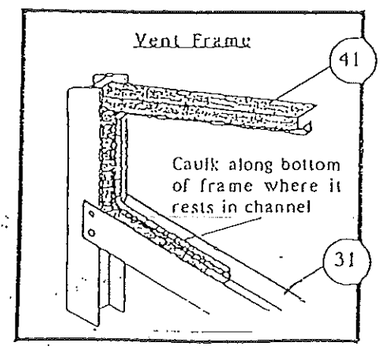

Diagram 10

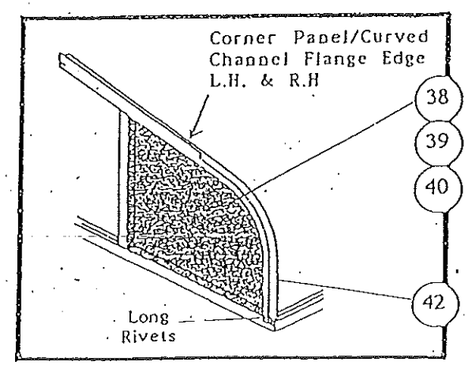

Placing the exhaust fan **(sequence step 32)**, inside the horizontal "H" channel and against the vertical "U" rail, making sure the fan shutter will open outward, rivet the exhaust fan to the horizontal channel and the vertical "U" rail. Secure the exhaust fan by installing the fan post **(sequence step 33)**. Be sure the fan post is tight against the exhaust fan to allow adequate spacing for the fan outer and inner filler panels **(sequence step 34, 35, 36)**. Cap the panel section with the final horizontal "H" channel **(sequence step 37)**. When the left hand outer and inner filler panels are completed **(sequence steps 38, 39, 40)**, install the air vent frame as shown in **diagram 9**. The inner part of the air vent will be installed at a later stage. Making sure the air vent frames will open outward, apply caulking along the bottom of the air vent frame and rest it inside the "H" channel **(sequence step 41)**. Attach the curved channel **(sequence step 42)**, by riveting it first to the upper rail "H" channels using the long rivets provided. Work the curved channel up over the corner panel, corner posts and the air vent frame as shown in **diagram 10**. A gentle tap may be needed to hold the curved channel in place.

Diagram 8

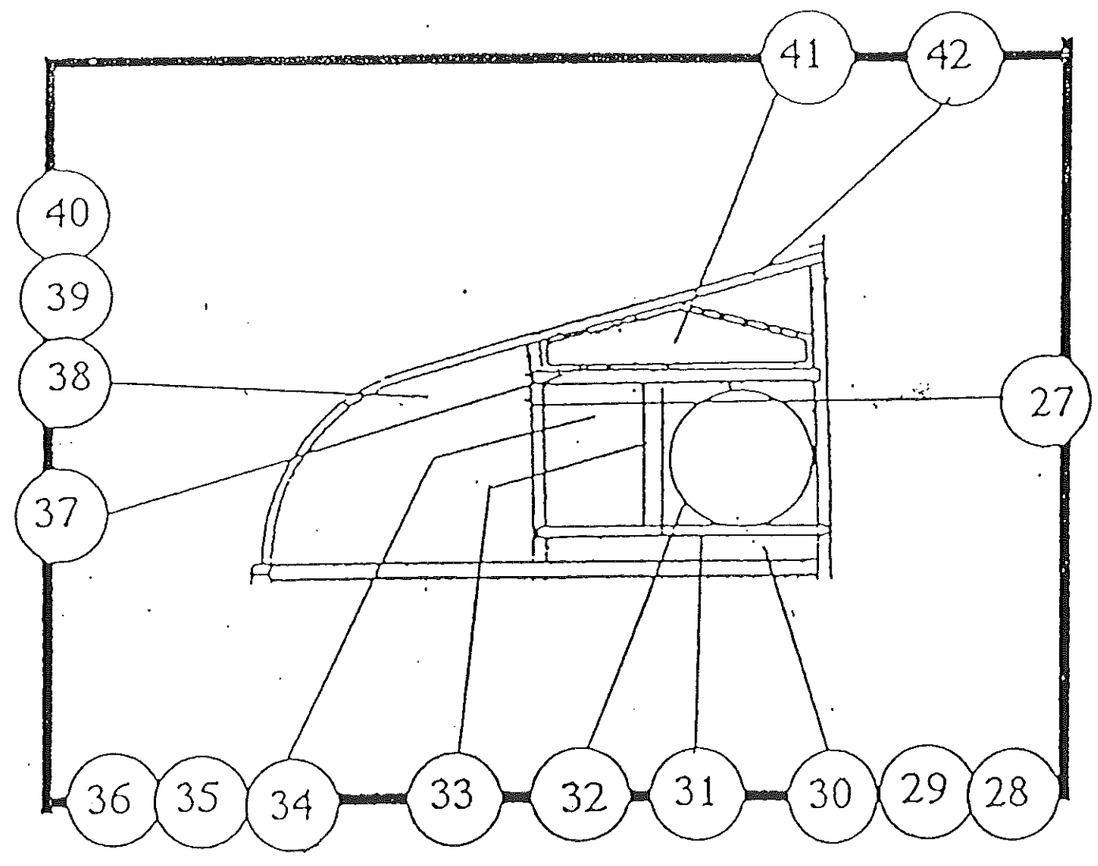

SUNGLO GREENHOUSES SERIES 1500
SECTION 4: UPPER SIDE WALL ASSEMBLY (GABLE END WITH DOOR)

SEQUENCE	PART #	PART NAME	QUANTITY	√
43.	1015	OUTER CORNER PANEL	1	
44.	1069	PANEL SUPPORTS	2	
45.	1042	RIGHT HAND INNER CORNER PANEL	1	
46.	1003-11	30" SLOTTED "H" RAIL	1	
47.	1549-2	RIGHT HAND VENT FRAME	1	
48.	1503-1	CURVED OVERHEAD CHANNEL	1	

The construction of the upper gable end with door is the same as the upper gable end with no door. The parts used for this section are similar to the parts for the gable end with no door, **section 3**. When the upper side wall assembly is completed, (gable end with a door), it will leave a rough opening for the door assembly to be installed at a later stage **(sequence steps 43 thru 48). See diagram 11.**

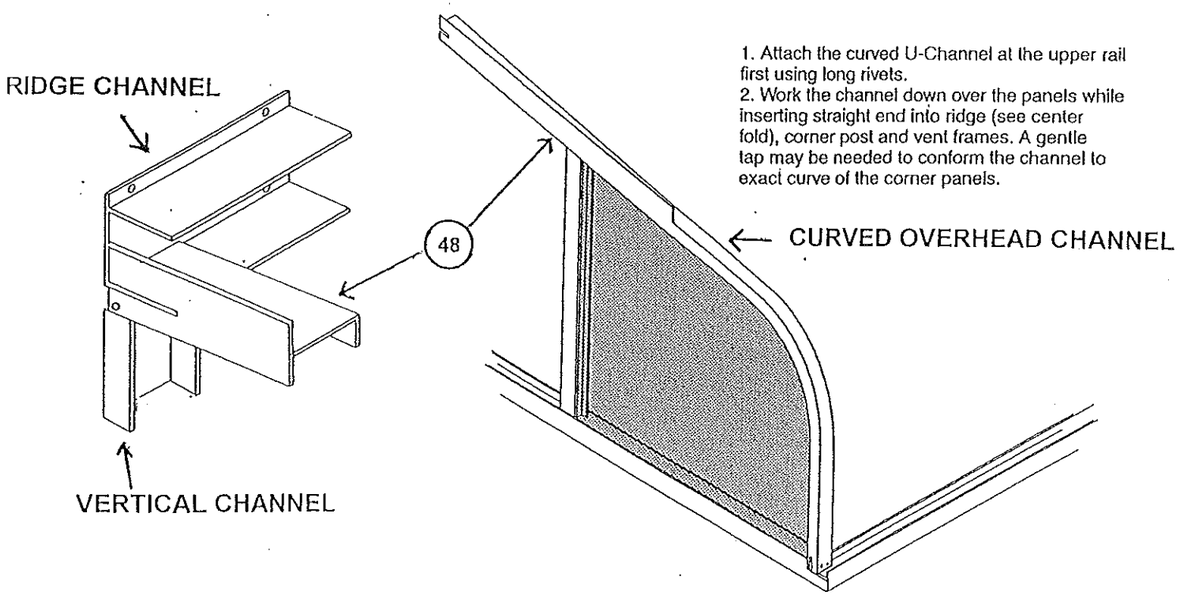

1. Attach the curved U-Channel at the upper rail first using long rivets.
2. Work the channel down over the panels while inserting straight end into ridge (see center fold), corner post and vent frames. A gentle tap may be needed to conform the channel to exact curve of the corner panels.

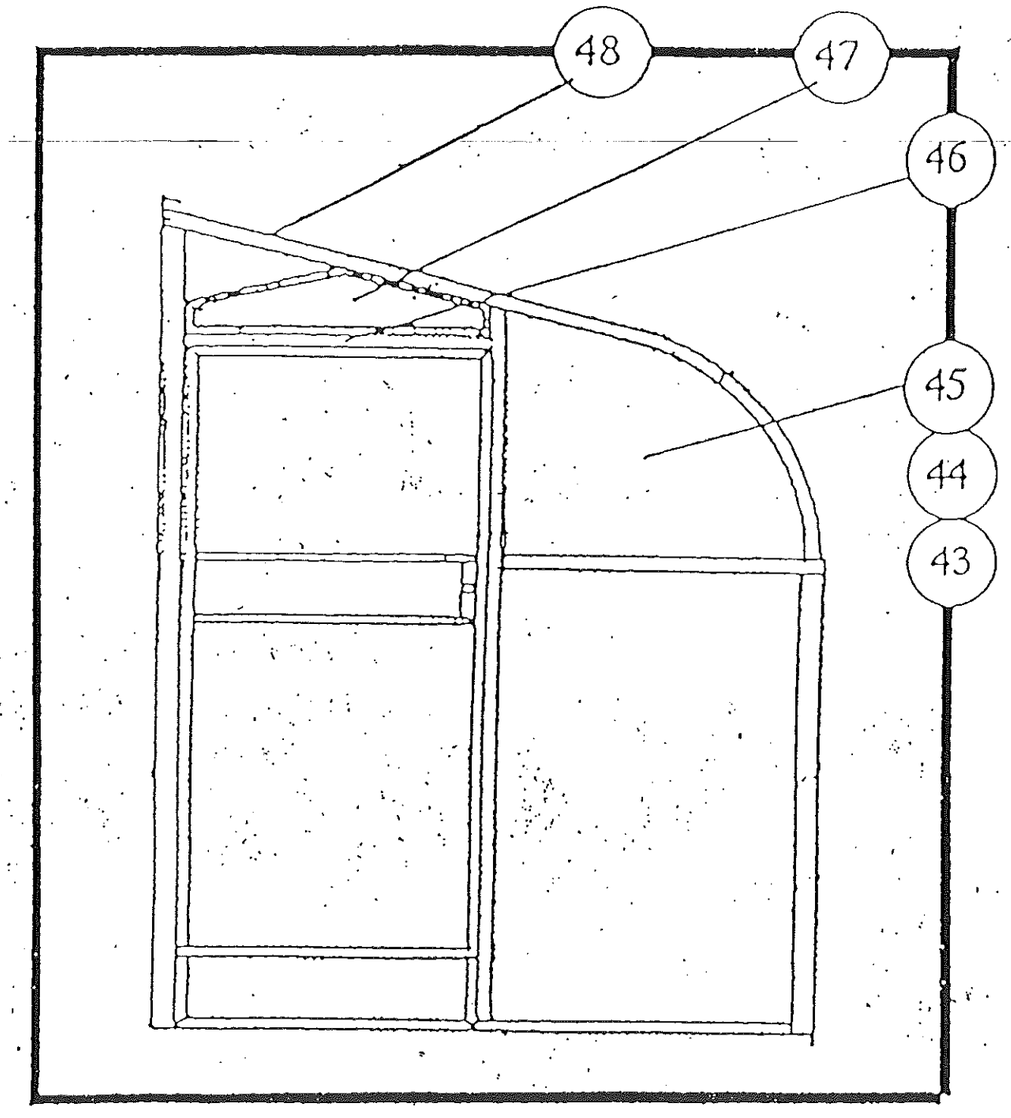

SECTION 5: OVERHEAD TRUSSES AND HANGER BAR ASSEMBLY

SEQUENCE	PART #	PART NAME	QUANTITY	√
49.	1505-1	OVERHEAD TRUSSES	SEE PACK LIST	
50.	1806-12	HANGER BARS	SEE PACK LIST	
51	1806-11	HANGER BARS	SEE PACK LIST	

The overhead trusses are located at 30" centers on the upper rail "H" channels and the ridge channel. Starting from one end, measure out 30" centers on both the upper rail "H" and the ridge channel. Insert the overhead trusses to these marks and rivet as shown in **diagrams 13, 14, 15. (sequence step 49).**

Diagram 13

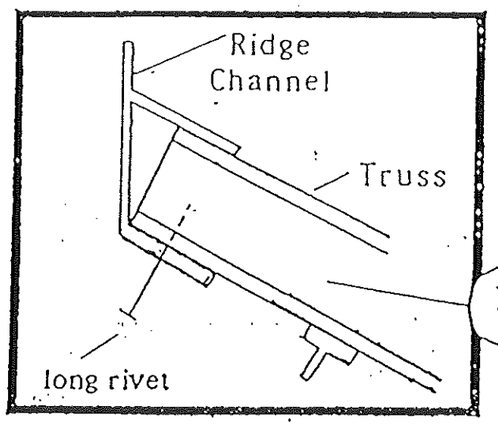

Diagram 14

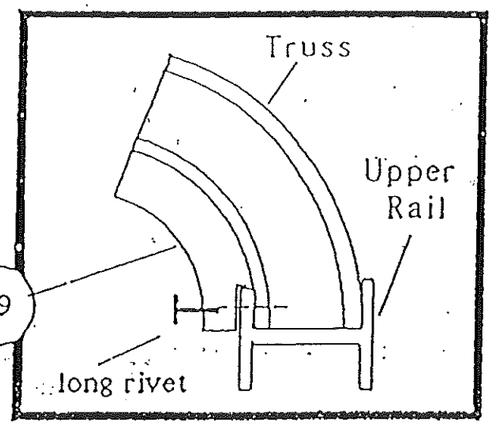

Hanger bars provide dimensional stability and strength to the Sunglo Greenhouse. They also keep the overhead trusses to 30" centers. Hanger bars are installed between the overhead trusses and between the curved end channels and trusses. From inside the Sunglo Greenhouse, measure down 30" from the ridge channel and mark the overhead trusses and curved end channels. Then rivet the hanger bars to the marked locations **(sequence steps 50, 51).** Two (2) additional hanger bars are used for the left and right side air vent doors; (assembly at a later stage). These hanger bars **(sequence step 50)** are installed 16" down from the ridge channel on the 2 outside roof bays of the Sunglo Greenhouse as shown in **diagram 15.**

Diagram 15

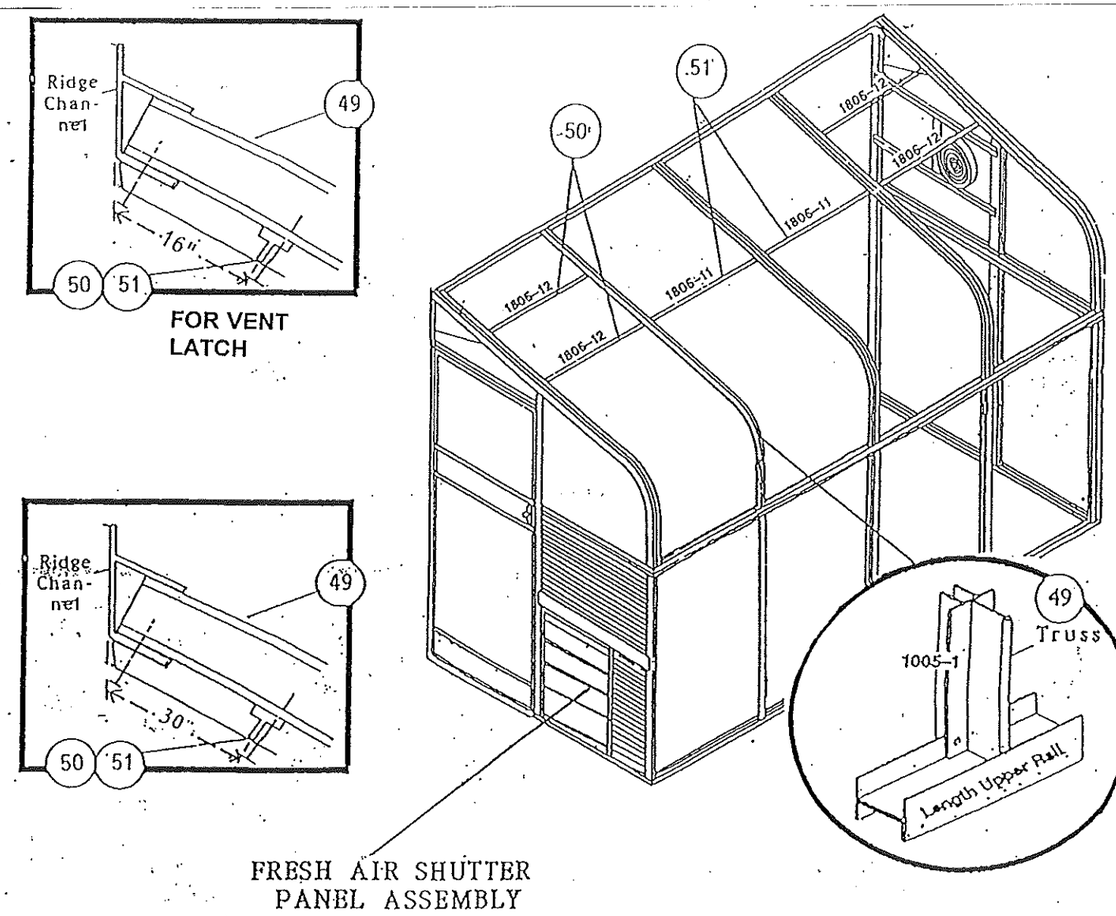

SUNGLO GREENHOUSES SERIES 1500:

SECTION 6: OVERHEAD ACRYLIC PANELS AND PANEL LOCKS ASSEMBLY

SEQUENCE	PART #	PART NAME	QUANTITY	√
52.	1532	OVERHEAD INNERS	SEE PACK LIST	
53.	1531	OVERHEAD OUTERS	SEE PACK LIST	
54.	1069	PANEL SUPPORTS	2 PER BAY	
55.	1509-1	PANEL LOCKS	SEE PACK LIST	

Starting at one end of the roof, lay the corrugated inner panel between the end curved channel and the overhead truss. Be sure the flat edge of the corrugated overhead inner panel is facing the inside of the Sunglo Greenhouse and the inner panel is in both the upper rail "H" and the ridge channel. Lay the flat overhead outer panel over the corrugated overhead inner panel, sliding its upper edge into the ridge channel, and its lower edge into the upper rail "H" channel as shown in **diagram 16 (sequence steps 52, 53, 54)**. Remember to install the panel supports in the overhead acrylic panel's assembly.

Move to the next roof opening and perform the same process. Once two roof bays are completed, the panel locks (black plastic strips), can now be installed. Panel locks should be installed by reaching over the top from within the greenhouse as shown in **diagram 17A**. Place the panel lock tight and even with the top flanges of the ridge channel, centered directly over the overhead truss with the trimmed rib facing down over the upper "H" channel. With a rubber mallet, gently tap the panel lock down until it is secured on the overhead truss as shown in **diagram 17**. Panel locks should be installed only half way down the roof at this time for possible roof re-alignment later. As an option you may seal the top of the panel lock where it meets the ridge channel with a dab of silicone. Perform the same procedures for the entire roof section.

NOTE: Before tapping the panel locks down the remaining half of the truss to the upper rail "H" channels, be sure the overhead outer roofs have remained tight to the inside of the ridge channel and have not slipped down during the panel lock installation. If this has occurred the outer roof panel will have a buldge in it. The problem can be solved by re-aligning the overhead outer panels tight to the insdie of both the upper rail "H" and the ridge channel or cutting off the excess of the overhead outer panel at the bottom with a sharp razor knife.

When the entire roof section is completed, finish installing the panel locks by tapping them down on the overhead truss till the panel locks locking fin meets the upper rail "H". At this point there will be approximately 1-3/4" of the panel lock hanging over the upper rail "H" , drill a hole on each side of this overhang through the panel lock into the upper rail "H" and rivet both sides to the upper rail "H".

Diagram 16

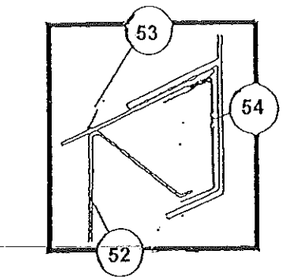

Diagram 16A

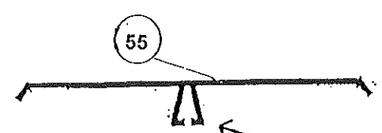

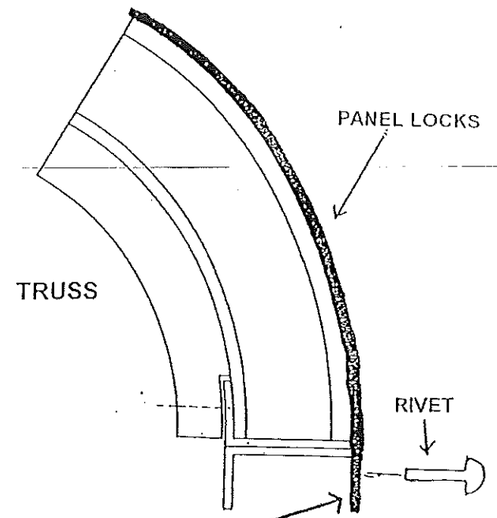

NOTE: The locking fin has been shaved off the bottom of the **PANEL LOCK** by 1 3/4". Rivet the flat bottom of the **PANEL LOCK** to the upper "H".

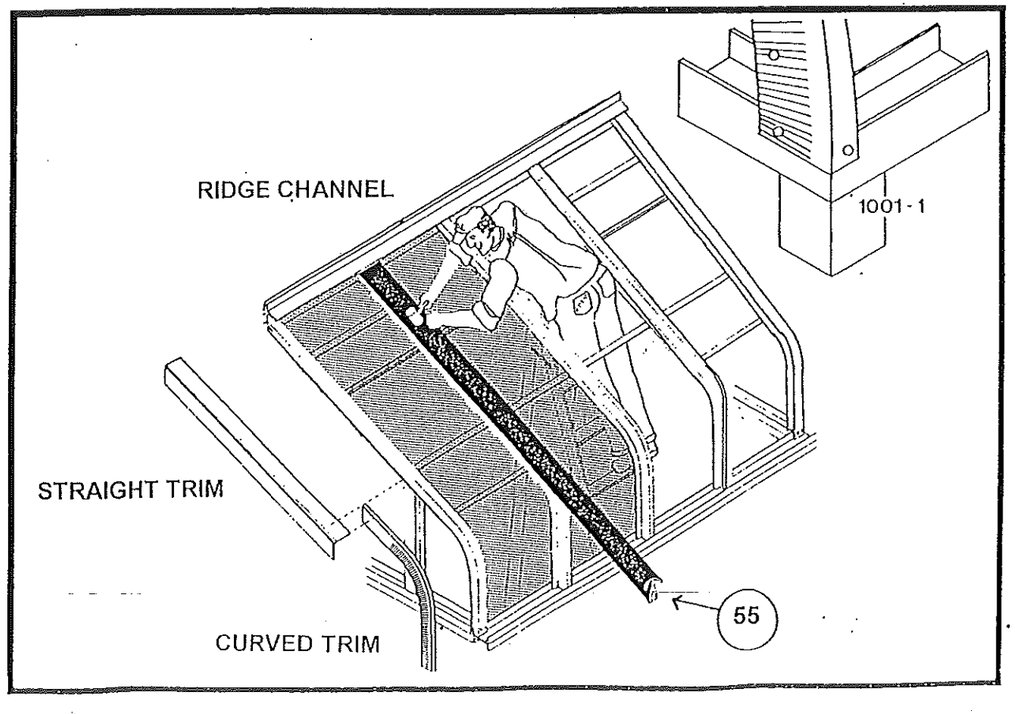

SUNGLO GREENHOUSES SERIES 1500:
SECTION 7: OUTSIDE ROOF TRIM PIECES INSTALLATION

SEQUENCE	PART#	PART NAME	QUANITY	√
56.	1014-1	L.H. OVERHEAD CURVED TRIM	1	
57.	1014-2	R.H. OVERHEAD CURVED TRIM	1	
58.	1514-1	R.H. STRAIGHT TRIM	1	
59.	1514-2	L.H. STRAIGHT TRIM	1	
60.	1069	PANEL SUPPORTS	SEE PACK LIST	

To complete the roof assembly, attach the two outside roof pieces (a long curved corrugated aluminum piece and a short straight piece) to each end of the Sunglo Greenhouse as shown in **diagram 17**. Starting at one end, rivet the curved corrugated section of the trim **(sequence steps 56, 57)** as shown in **diagram 17A**. Pressing the curved corrugated trim snug against the edge of the curved channel, drill and rivet up the side of the curved corrugated trim to the curved channel every 6". To install the short straight piece **(sequence steps 58, 59)**, press the straight trim firmly into the ridge channel at the top of the peak. Starting from the top, press the straight trim snug against the edge and drill and place 2 rivets every 6" all the way to the bottom using the **long rivets** provided. Continue this process until you have completed both sides. Now you can complete the roof section by installing the panel supports in the upper rail "H" channels as shown in **diagram 18 (sequence step 60)**.

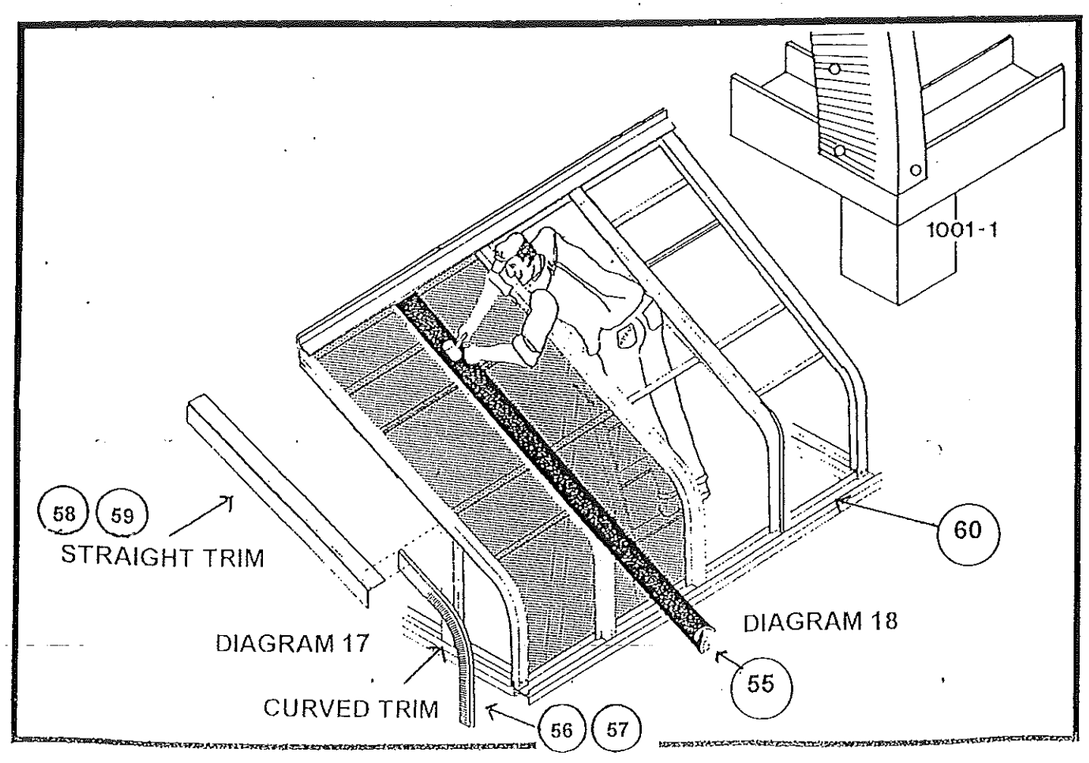

SUNGLO GREENHOUSES SERIES 1500:
SECTION 8: AIR VENT DOORS INSTALLATION

SEQUENCE	PART #	PART NAME	QUANTITY	√
61.	1016	MANUAL VENTS	2	
62.		BACKING WASHERS	12	
63.	1017	VENT HINGES	4	
64.	1047	VENT LATCHES	2	
65.	1046	CLOSER SPRINGS	2	

Using long rivets and backing washers, rivet the hinges to the vent door about 6" from each end of the air vent door before securing the door into the vent frame. The hinge rivets should be backed with a washer where the rivet passes through the plastic to prevent cracking. Center the vent door in the vent frame and rivet the hinges to the channel as shown in **diagrams 19, 20, 21**. Attach one end of the vent door latch to the hanger bar by riveting it to the hanger bar, then rivet the other end of the latch to the vent door with rivets and washers **(sequence steps 61 thru 65)**. Install the vent latch spring as shown in the diagrams. Perform this process until all air vent doors are completed.

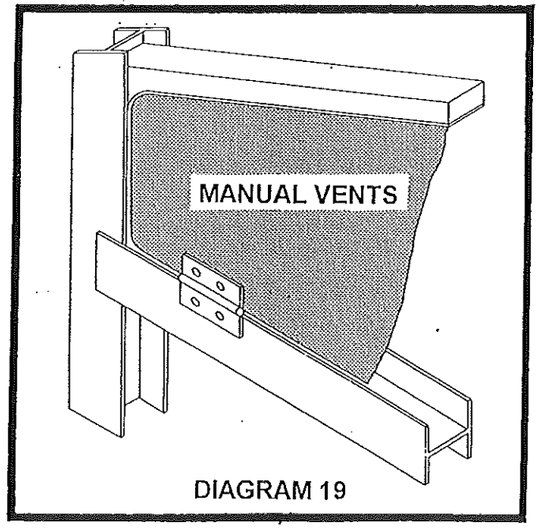

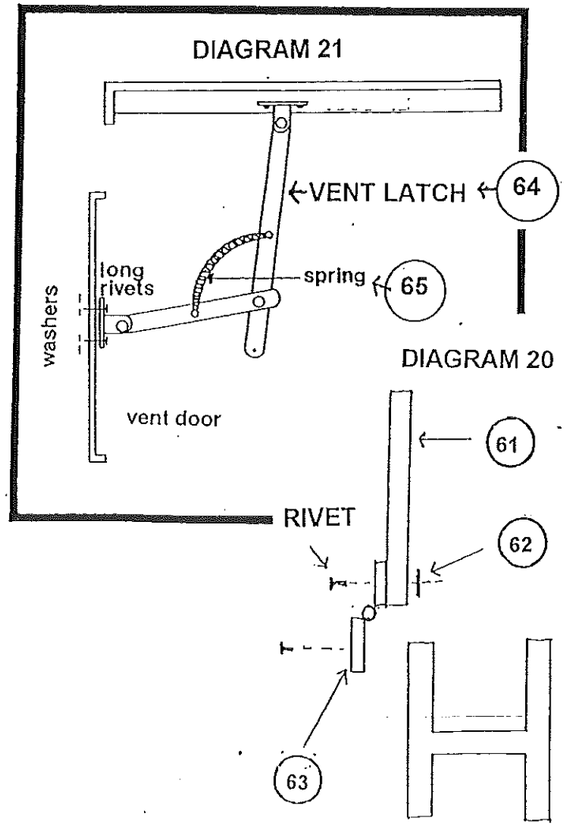

SUNGLO GREENHOUSES SERIES 1500:
SECTION 9: BENCH FRAME INSTALLATION

SEQUENCE	PART #	PART NAME	QUANTITY	√
66.	1006-1	BENCH TEES	SEE PACK LIST	
67.	1006-2	30" BENCH TEES	SEE PACK LIST	
68.	1006-15	BENCH TEES	SEE PACK LIST	

You have been furnished with a complete set of bench frame work to run lengthwise down the curved side of your Sunglo Greenhouse. You may wish to alter the configuration shown **(diagram 22)** to suit your needs.

From the ground level, measure up and mark 30" in height on the wall and corner posts. This will be the height of the bench frame work. If you so desire it is optional to have the bench frame work set at a different height.

Secure one of the long bench tee **(sequence step 66)** against the back wall by riveting it to the wall posts. Two rivets are used for each wall post. Rivet the bench frame legs **(sequence step 68)** to the wall posts while resting above the bottom rail "U" channel on the foundation plate so that a 45 degree angle is formed away from the wall as shown in **diagram 22**. Install the 30" bench tee **(sequence step 67)** by riveting them outward from the wall and corner posts. Rivet another long bench tee **(sequence step 66)** to the 30" bench tees. To complete the bench frame, place a level on top of the bench frame making sure each is level, then rivet the bench frame legs to the bottom of the 30" bench tees.

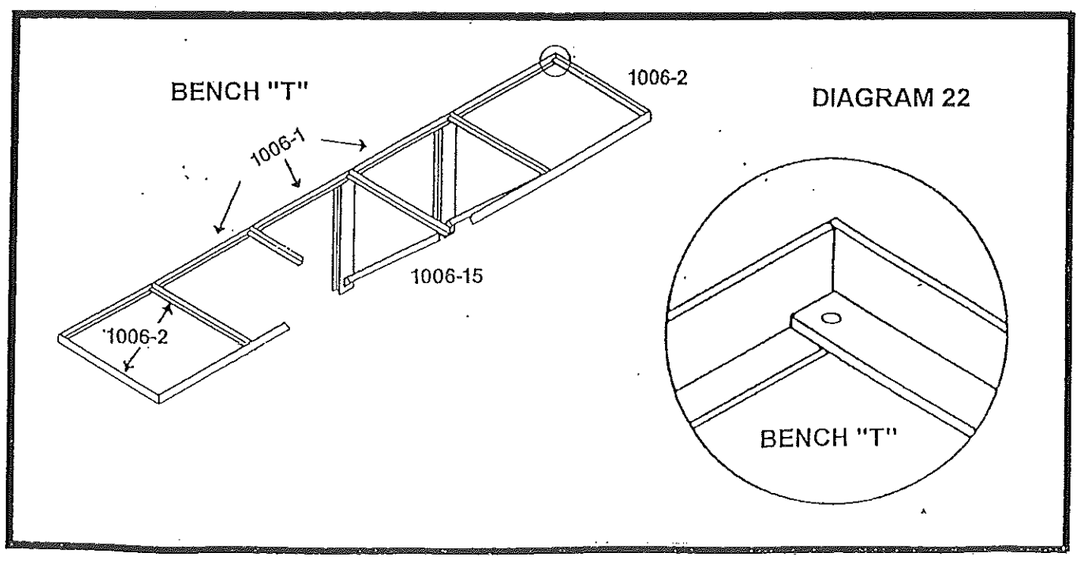

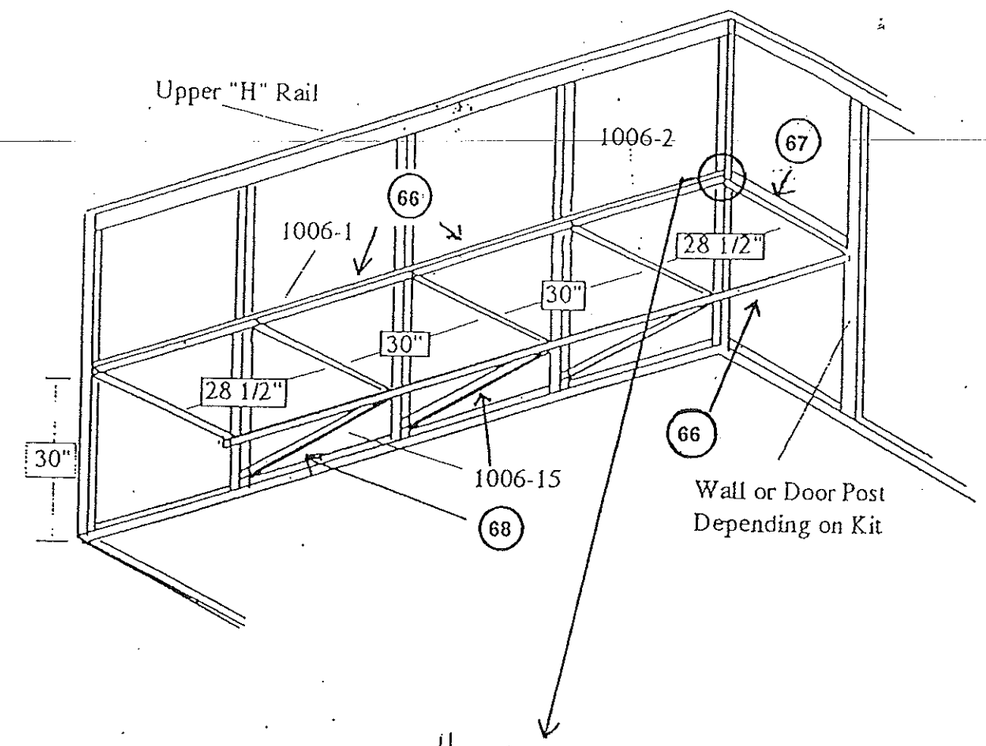

DIAGRAM 22.

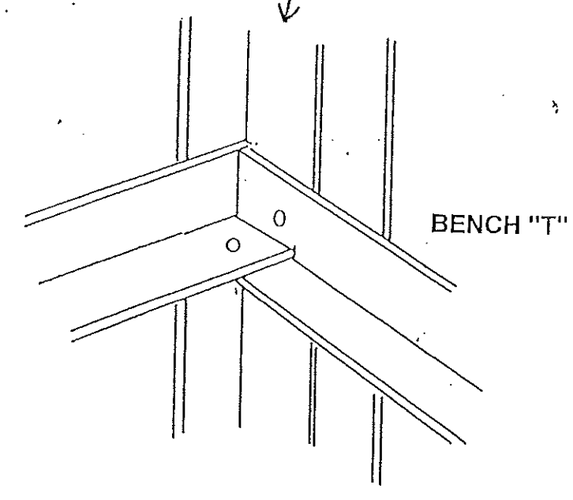

SUNGLO GREENHOUSES SERIES 1500:
SECTION 10: DOOR AND LATCH ASSEMBLY

SEQUENCE	PART #	PART NAME	QUANTITY	√
69.	1018	THRESHOLD	1	
70.	#8	THRESHOLD SCREWS	3	
71.	1013-3	TOP DOOR JAMB	1	
72.	1013-1	LEFT HAND DOOR JAMB	1	
73.	1013-2	RIGHT HAND DOOR JAMB	1	
74.	1048	DOOR ASSEMBLY	1	
75.	1017	DOOR HINGES	4	
76.	1019	DOOR LATCH SET	1	
77.	1045	DOOR LATCH PLATE	1	

NOTE: THE DOOR LATCH IS PACKAGED WITH A SEPARATE INSTRUCTION SHEET. PLEASE DISREGARD THESE PACKAGED INSTRUCTIONS. **PLEASE FOLLOW OUR INSTRUCTIONS BELOW FOR THE DOOR LATCH ASSEMBLY.**

The materials required for this phase of the greenhouse assembly include the threshold, door, door latch, hinges and the door jamb material. First install the threshold **(sequence step 69)**, using 3 #8 countersink screws **(sequence step 70)**. The lip of the threshold should be towards the inside of the greenhouse so the door will have the lip to close against. See **diagram 23**. Install the door jamb next.

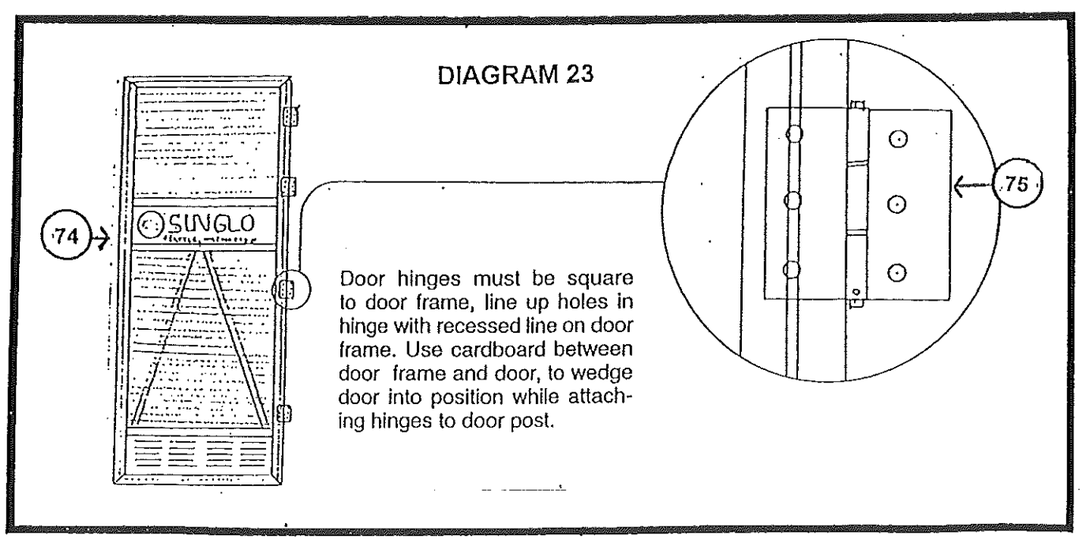

The door jamb consists of 3 aluminum pieces **(sequence steps 71, 72, 73)**. **These parts fit only one way and are not be riveted until the door is fitted.** Starting at the top, slip the pieces of the door jamb inside the door frame, make sure the door jamb resting edge is to the back and provides a stop for the door as shown in **diagram 25**. Use 4 hinges **(sequence step 75)** rivet them to the door as shown in **diagram 23**. Make sure the hinges are square with the door and the raised side of the hinge is on the door as shown in **diagram 23**. (**NOTE:** THE DOOR CAN BE OPENED TO THE RIGHT OR LEFT SIDE DEPENDING ON THE PLACEMENT OF THE HINGES).

To install the door, position the door **(sequence step 74)** in the frame and place a piece of cardboard under the door to help get a proper threshold height. We recommend elevating the door approximately 1/4" above the threshold. Make sure the door is parallel with the wall posts then rivet the hinges to the door post. With the door closed, use the template found on the door latch package and position the template on the door so the dotted line is folded on the outside corner of the door. Adjust the height of the template so the latch is at a convenient height. Mark the exact position of the 3 holes on the door surface. Using a 1/4" drill bit, (not provided), drill the 3 holes straight through the door. Clear the holes by inserting the drill bit in the hole and rotating it with a wobbling action. The door latch spindle must have freedom to move in the hole. Install the door latch **(sequence step 76)** to the door. Make sure the screws are to the inside of the greenhouse. Then rivet the latch catch **(sequence step 76)** to the door latch plate **(sequence step 77)** as shown in **diagram 24** and rivet the whole assembly to the door post. Make sure the door latch will engage correctly with the catch.

NOTE: DO NOT USE THE 2 PLASTIC PLATES PACKAGED WITH THE DOOR LATCH ASSEMBLY.

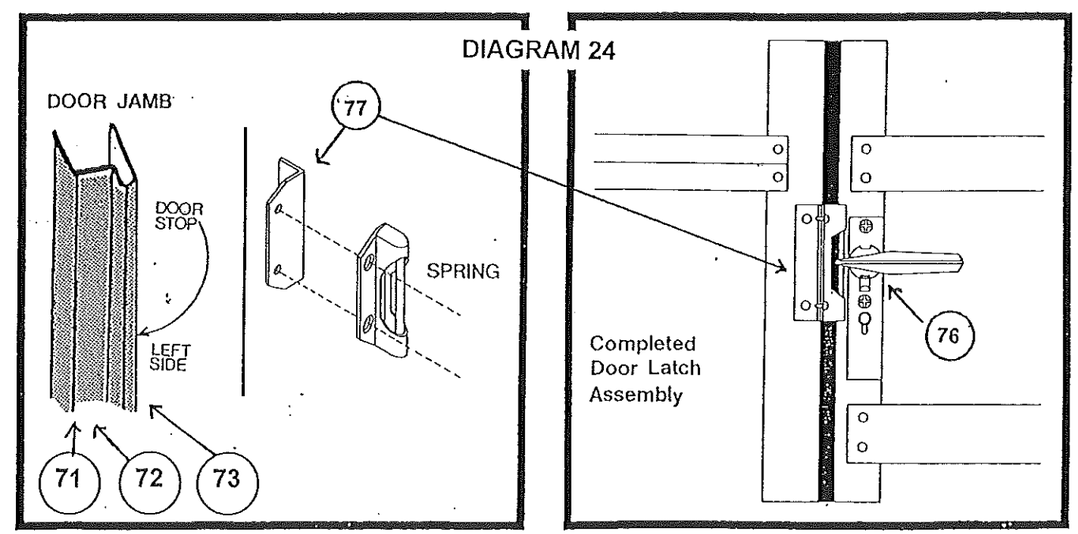

SUNGLO GREENHOUSES SERIES 1500:
SECTION 11: PANEL SUPPORTS INSTALLATION

Panel supports are "U" shaped aluminum pieces used to assure a tight seal between the acrylic panels and the aluminum channel extrusions. Each Sunglo Greenhouse comes with enough panel supports to complete the upper ridge, the upper rail assembly and the lower frame assembly.

To install the panel supports, install the outer acrylic panel's first then insert the panel supports inside the aluminum channels. Be sure the flat side is facing towards the channels they are resting on as shown in **diagrams 26, 27**. Install the corrugated inner panels to complete the assembly. Each panel section requires two panel supports. When installing the panel supports they should be placed with an equal spacing between each support and the wall post, corner post or truss.

DIAGRAM 26

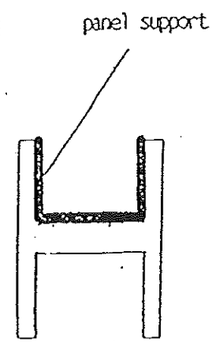

U shape of panel support sits inside "H" channel

DIAGRAM 27

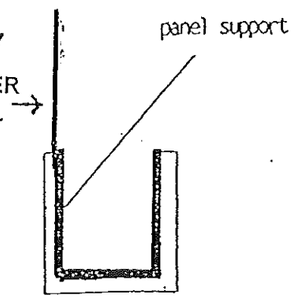

U shape of panel support sits inside "U" channel

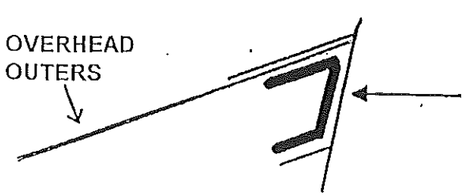

Panel Support sits inside of Ridge channel.

SUNGLO GREENHOUSES SERIES 1500:
SECTION 12: VINYL SHELVING INSTALLATION (OPTIONAL)

SEQUENCE	PART #	PART NAME	QUANTITY	√
78.		SHELVING END BRACKETS		
79.		SHELVING HANGER CLIPS		
80.		10' VINYL SHELVES		
81.		SUPPORT LEGS		
82.		SHELVING SUPPORT BRACKETS		
83.		LONG RIVETS		

Vinyl shelving is an optional accessory, and is installed as follows. The shelving end brackets **(sequence step 78)** are riveted to the ends of the greenhouse as shown in **diagram 28**. Using long rivets, rivet the shelving hanger clips **(sequence step 79)**, along the upper rail "H" channel. Divide these clips evenly along the upper rail "H" channel. Install the shelving **(sequence step 80)**, by placing it on the shelving end brackets and inside the shelving hanger clips. Locating each wall post, install the round end of the support legs **(sequence step 81)** to the front of the shelving and rivet the back ends to the wall posts using long rivets. When you have 2 sections of shelving meet, use a shelving support bracket **(sequence step 82)**, to support the 2 edges at the front, and use 2 shelving hanger clips **(sequence step 79)**, to support the back ends. Perform this process for the other side of the greenhouse.

Support leg normally used for vinyl shelving.

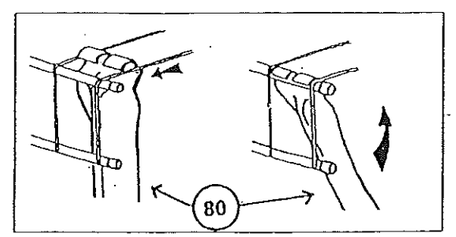

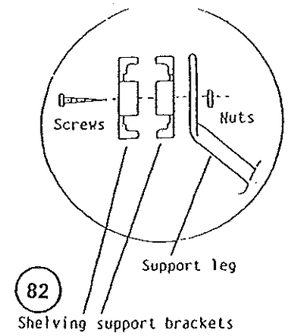

DIAGRAM 28

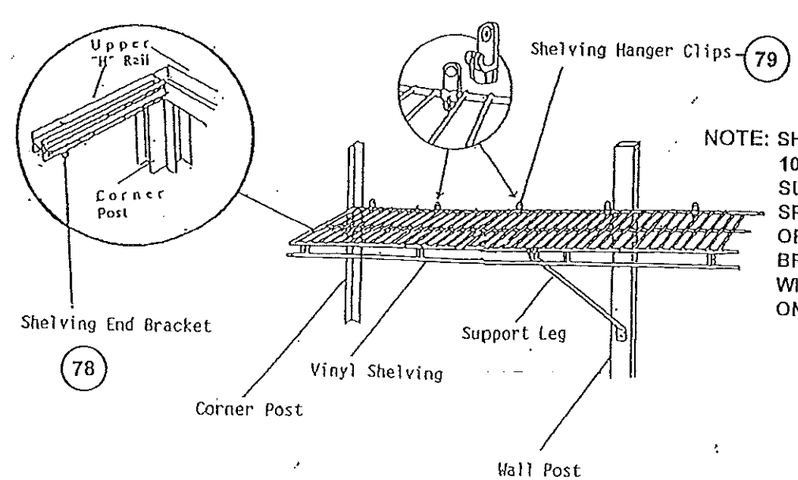

NOTE: SHELVING LONGER THAN 10' REQUIRE THE USE OF SUPPORT BRACKETS TO SPLICE TWO SECTIONS OF SHELVING TOGETHER. BRACKETS ARE SUPPLIED WITH THIS ACCESSORY ONLY IF NECESSARY.

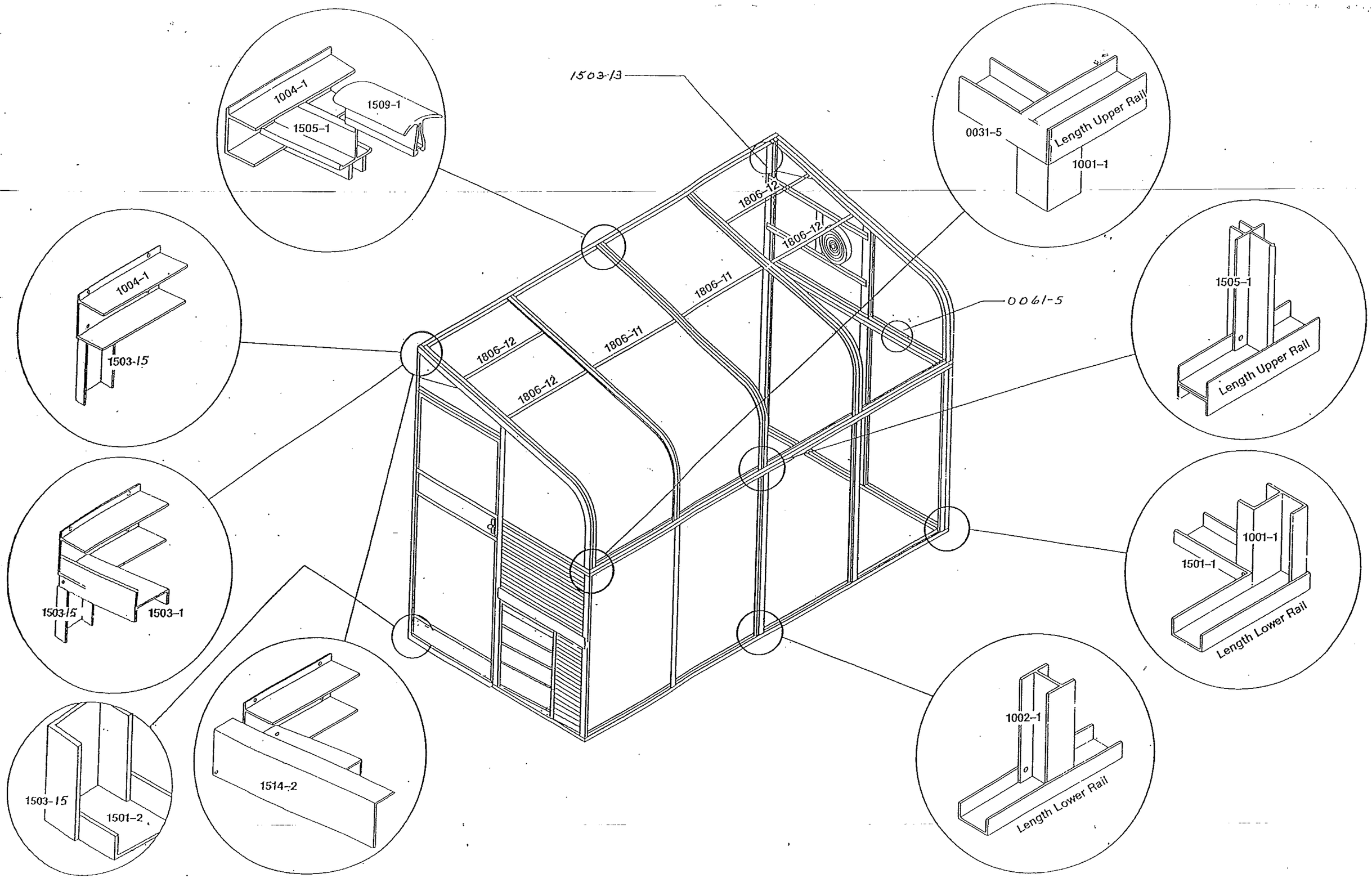
1004-1
1509-1
1505-1
1503-13
0031-5
Length Upper Rail
1001-1
1806-12
1806-12
1806-11
1806-11
1806-12
1806-12
0061-5
1004-1
1503-15
1505-1
Length Upper Rail
1503-15
1503-1
1001-1
1501-1
Length Lower Rail
1503-15
1501-2
1514-2
1002-1
Length Lower Rail